LTE in a Nutshell:

Protocol Architecture

WHITE PAPER

PROTOCOL OVERVIEW

This whitepaper presents an overview of the protocol stack for LTE with the intent to describe where important functions reside along with the implications of such architectural design. First, and by way of a refresher, Figure 1 shows the elements of the evolved packet system (EPS) along with the interface protocol designations. Figure 2 shows the functional split between the E-UTRAN and the EPC.

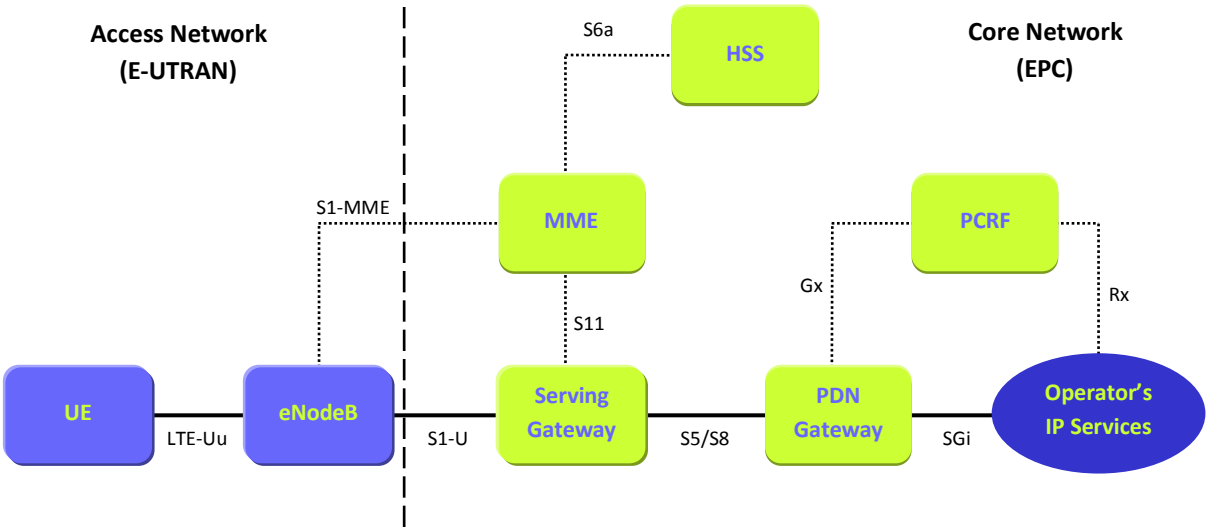

FIGURE 1 THE EPS NETWORK ELEMENTS.

The radio protocol architecture for LTE can be separated into control plane architecture and user plane architecture as shown in Figure 3 and Figure 4. The user plane protocol stack between the e-Node B and UE consists of the following sub-layers: PDCP (Packet Data Convergence Protocol), RLC (radio Link Control), and Medium Access Control (MAC). The control plane includes the Radio Resource Control layer (RRC) which is responsible for configuring the lower layers.

On the user plane, packets in the core network (EPC) are encapsulated in a specific EPC protocol and tunneled between the P-GW and the eNodeB. Different tunneling protocols are used depending on the interface. GPRS Tunneling Protocol (GTP) is used on the S1 interface between the eNodeB and S-GW and on the S5/S8 interface between the S-GW and P-GW.

As a matter of nomenclature, packets received by a layer are called Service Data Unit (SDU) while the packet output of a layer is referred to by Protocol Data Unit (PDU). So for example, on the transmit path of the user plane, the PDCP send a PDCP PDU to the RLC which is referred to as an RLC SDU. The receive path reverses the operation so a layer sends a SDU to a higher layer which receives it as a PDU.

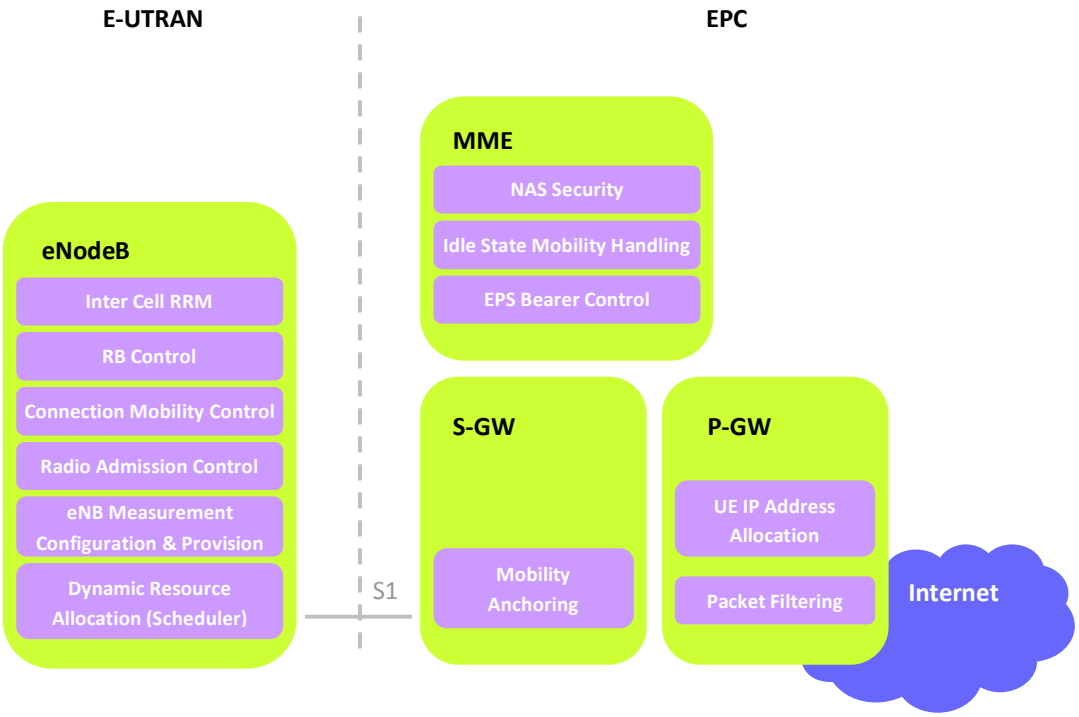

FIGURE 2 FUNCTIONAL DIAGRAM OF THE EPS.

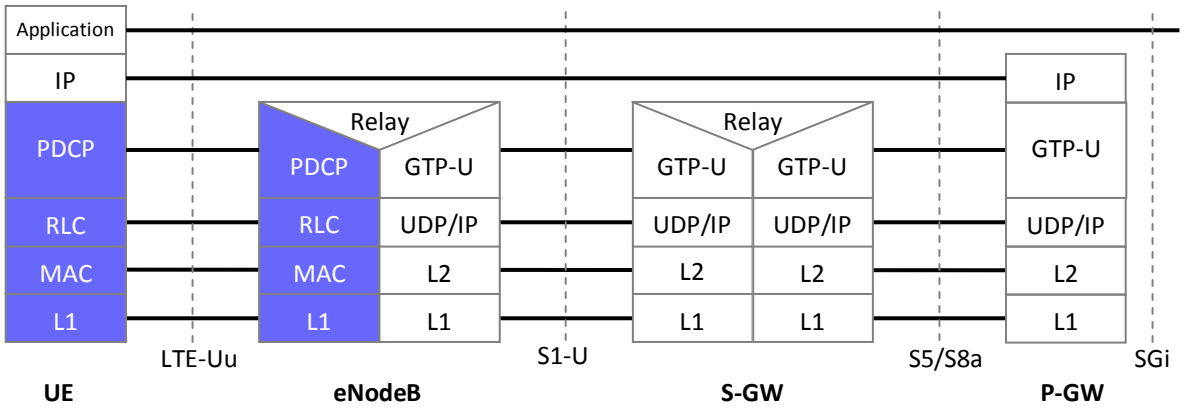

FIGURE 3 USER PLANE PROTOCOL STACK.

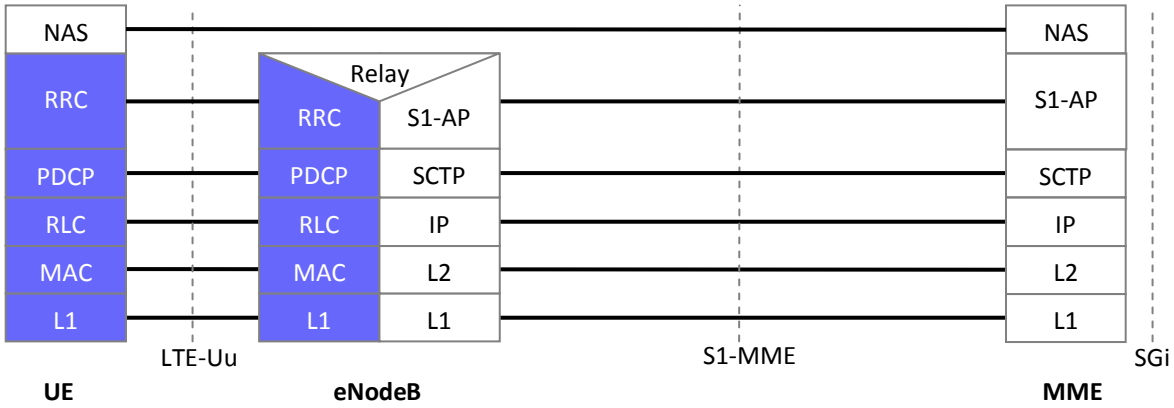

FIGURE 4 CONTROL PLANE PROTOCOL STACK.

CONTROL PLANE PROTOCOLS – RADIO RESOURCE CONTROL (RRC)

The Control Plane handles radio-specific functionality which depends on the state of the user equipment which includes two states: idle or connected.

In the idle mode, the user equipment camps on a cell after a cell selection or reselection process where factors like radio link quality, cell status and radio access technology are considered. The UE also monitors a paging channel to detect incoming calls and acquire system information. Control Plane protocols in this mode include cell selection and reselection procedures.

In the connected mode, the UE supplies the E-UTRAN with downlink channel quality and neighbor cell information (including other frequencies and radio access technologies) to enable the E-UTRAN to select the most suitable cell for the UE. In this case, control plane protocol includes the RRC protocol.

The RRC protocol covers the following functional areas:

1- System Information: broadcasting of system information of a type applicable to the connected mode and another to the idle mode. System information is defined in System Information Blocks (SIBs) which contains different parameters. Eight SIBs are defined in addition to a Master Information Block (MIB) which includes a limited number of the most frequently transmitted parameters that are essential for a UE's initial access to the network. System information is mapped onto different logical channels depending on the state of the UE and the type of information.

2- RRC Connection Control: includes procedures for establishment, modification and release of RRC connections for paging, security activation, Signaling Radio Bearers (SBRs), Data Radio Bearers (DRB), handover, and other functions such as configuration of lower protocol layers.

   To reduce E-UTRAN overhead and processing for a UE that is registered on the MME in order to save UE battery power, UE-related information can be released after a long period of data inactivity in which case the MME would retain the UE context and established bearer information during these idle periods. These states are referred to as EPS Connection Management (ECM) Idle and Connected modes. The UE state at the MME is captured by the EPS Mobility Management (EMM) state and can be either Deregistered or

Registered. The transition between ECM Idle and Connected modes involves establishment of RRC connection.

<table>
<tr><th></th><th>1:Off</th><th>Attaching</th><th>2: Idle/ Registered</th><th>Connecting to EPC</th><th>3: Active</th></tr>
<tr><td>EMM</td><td colspan="2">DEREGISTERED</td><td colspan="3">REGISTERED</td></tr>
<tr><td>ECM</td><td colspan="4">IDLE</td><td>CONNECTED</td></tr>
<tr><td>RRC</td><td>IDLE</td><td>CONNECTED</td><td>IDLE</td><td colspan="2">CONNECTED</td></tr>
</table>

FIGURE 5 POSSIBLE UE STATES COMBINATIONS.

When setting DRBs, the RRC configures the lower layers (PDCP, RLC, MAC & PHY). For example, the RRC instructs the PDCP to apply header compression for VoIP packets, or instructs the MAC to apply Hybrid ARQ (HARQ) for delay-tolerant traffic, and assign Prioritized Bit-Rates (PBRs) to control how the UE divides uplink resources between different radio bearers.

3- Network Controlled Mobility: includes mobility procedures, security activation and transfer of UE RRC context information.

4- Measurement & Configuration Reporting: required to support mobility function.

In addition to the RRC, the PDCP and RLC perform their functions on control plane data which will be outlined below when these layers are discussed as part of the user plane protocols.

USE PLANE PROTOCOLS

The user plane comprises the following layers:

1- Packet Data Convergence Protocol Layer (PDCP)

2- Radio Link Control Layer (RLC)

3- Medium Access Control Layer (MAC)

PACKET DATA CONVERGENCE PROTOCOL LAYER

The PDCP layer is responsible for the following function:

1- Header compression and decompression for all user plane data packets. This is based on Robust Header Compression (ROHC) protocol which stores static parts of the header updating them only when they change. The dynamic parts are compressed by transmitting the difference from the reference. RoHC is especially important for voice services where the IP/UDP/RTP header comprises a large percentage of the actual packet size. For example, the IPV4 header is 40 bytes which can be compressed to 4-6 bytes resulting in great capacity savings considering that the VoIP transport payload is only 32 bytes.

2- Handover management: re-orders and sequences PDUs during a handover from one cell coverage area into another. Two types of handover are defined: seamless handover and lossless handover.

a. Seamless handover: applies to control plane data and RLC Unacknowledged Mode (UM) user plane data – data tolerant to loss but not to delay such as VoIP. This handover type is relatively simple and designed to minimize delay as no security context has to be exchanged between the source and target eNodeB during a handover. A PDCP SDUs at the eNodeB that have not been transmitted are forwarded over the X2 interface for transmission by the target eNodeB. The PDCP SDUs at the UE that have not been transmitted are buffered and transmitted after the handover is complete.

b. Lossless handover: This mode is used for delay tolerant data but is loss sensitive such as file download where it is desired to minimize packet losses to save bandwidth utilization and enhance data rate. This handover applies to RLC Acknowledge Mode (AM) bearers. In this case, a sequence number is used to provide lossless handover by retransmitting PDCP PDUs that have not been acknowledged prior to the handover.

3- Performs encryption and decryption services for user and control plane data in addition to integrity protection and verification of control plane data. Ciphering protects against eavesdropping and integrity protection allows the detection of packet insertion or replacement by a third party. LTE systems can use either SNOW 3G or AES-128 encryption. While a full accounting of the security functions in LTE is beyond the scope of this whitepaper, it is important to note that LTE includes mutual authentication of the UE and the network. This is completed through a common shared key in the Authentication Center (AuC) of the HSS and in the USIM.

Security functions occur below RoHC which cannot operate on encrypted packets as it does not understand an encrypted header. Therefore, in transmit mode, RoHC compression occurs before encryption and on the receive side, RoHC decompression occurs after decryption.

Radio Link Control (RLC)

In the transmit path, the RLC is tasked with reformatting PDCP PDUs – referred to as segmentation and/or concatenation -- to fit the size required by the MAC layer (transport block – TB). On the receive path, the RLC reconstructs the PDCP PDUs. Transport block sizes depend on bandwidth requirements, distance, power requirements, modulation scheme and type of application. Segmentation and concatenation can be present at the same time in an RLC PDU.

The RLC also reorders packets received out of sequence during HARQ operation. The RLC communicates with the PDCP through a Service Access Point (SAP) and with the MAC through logical channels.

There are three modes for data transmission by the RLC: Transparent Mode (TM), Unacknowledged Mode (UM), and Acknowledged Mode (AM).

The Transparent Mode: This is a pass-through mode which maps RLC SDUs to RLC PDUs and vice versa without any overhead or modifications done to the packets. It is only used for some control signaling such as broadcast system information and paging messages.

Unacknowledged Mode: This mode is used for delay sensitive traffic such as VoIP. Point to multipoint traffic such as Multimedia Broadcast/Multicast Service (MBMS) also uses this mode. In this mode, the layer performs segmentation and concatenation of RLC SDUs, reordering and duplicate detection of RLC PDUs, and reassembly of RLC SDUs.

Acknowledge Mode: This mode is used to support delay tolerant but error sensitive traffic (non-real time applications such as web browsing). It allows bidirectional data transfer where the RLC can transmit and receive data. It features Automatic Repeat reQuest (ARQ) to correct erroneous packets through retransmission of data (Note: Hybrid ARQ applies to a MAC transport block while ARQ applies to an RLC SDU.) Some control plane data (i.e. RRC messages) also uses this mode. In addition to the functions of the UM mode above, the RLC AM mode performs retransmission of RLC data plane PDUs, resegmentation of retransmitted RLC data PDUs, and other functions such as polling and status reporting.

Medium Access Control Layer

The MAC layer performs a number of important functions that includes the scheduler which distributes the available bandwidth to a number of active UEs. The implementation of the scheduler varies between different vendors and its performance is a key product differentiator. Random access procedure control is a MAC function which is used by the UE that is not allocated with uplink radio resources to access and synchronize with the network. The MAC also performs uplink timing alignment which ensures that UEs transmissions do not overlap when received at the base station. Discontinuous reception (DRX) is implemented at the MAC layer to save battery power by limiting the time the UE receive downlink channels at the additional cost of added latency.

The MAC also implements HARQ operation to retransmit and combine received data blocks (transport blocks) and generate ACK or NACK signaling in case of CRC failure. HARQ attempts to correct data by combining multiple transmissions of the data even as every single transmission has errors. In case this does not succeed in retrieving the correct data, the ARQ function at the RLC is invoked to initiate retransmissions and re-segmentation for any affected PDUs. LTE uses synchronous HARQ on the uplink where retransmissions occur at a predefined time relative to the initial transmission and asynchronous HARQ on the downlink where retransmissions can occur at any time relative to the initial transmission thereby requiring additional information to indicate the HARQ process number to enable the receiver to associate a retransmission with its corresponding transmission. While the actual retention and re-combination of data is done by the PHY, the MAC performs the management and signaling.

The MAC layer maps the RLC data received through logical channels onto transport channels connecting the MAC with the Physical Layer (PHY) as shown in Figure 6 and Figure 7. The reverse operation is done on the receive side. Table 1 lists and describes these channels. A MAC TB is sent in a 1-ms sub-frame – a full frame being 10 msec.

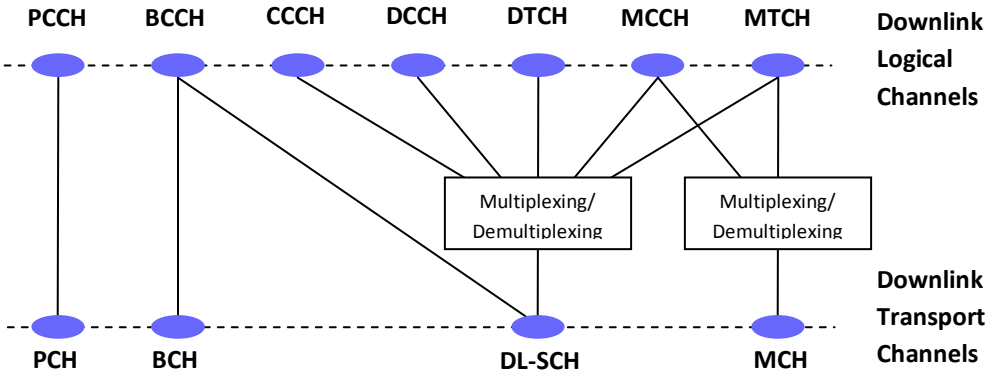

FIGURE 6 DOWNLINK LOGICAL CHANNEL MULTIPLEXING.

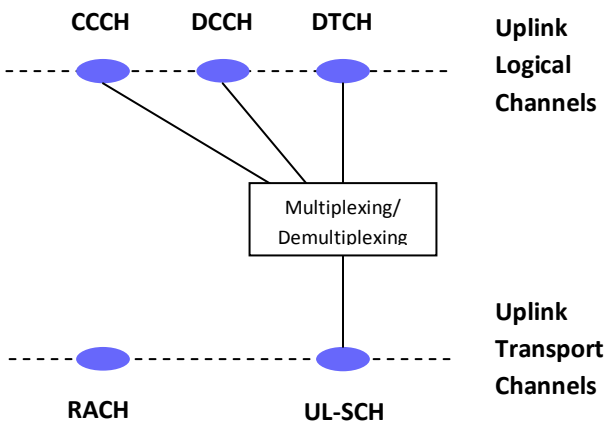

FIGURE 7 UPLINK LOGICAL CHANNEL MULTIPLEXING.

TABLE 1 LOGICAL AND TRANSPORT CHANNELS.

Channel Type		Description
Control Logical Channels		
BCCH	Broadcast Control Channel	Downlink channel used to broadcast system information.
PCCH	Paging Control Channel	Downlink channel used to notify UE of incoming call or change in system configuration.
CCCH	Common Control Channel	Downlink and uplink channel used to deliver control information during connection establishment when no confirmed association between the UE and eNodeB B has been established.
MCCH	Multicast Control Channel	Downlink channel used to transmit MBMS service control information.
DCCH	Dedicated Control Channel	Downlink and uplink channel used to transmit dedicated control information to a specific UE.
Traffic Logical Channels		
DTCH	Dedicated Traffic Channel	Downlink and uplink channel used to transmit dedicated user data.
MTCH	Multicast Traffic Channel	Downlink channel used to transmit user data for MBMS services.
Transport Channels: Downlink Transport Channels		
BCH	Broadcast Channel	Used for part of the system information essential to access the DL-SCH.
DL-SCH	Downlink Shared Channel	Used to transport downlink user data or control messages and system information not transported over the BCH.
PCH	Paging Channel	Used to transport paging information.
MCH	Multicast Channel	Used to transport user data or control messages requiring MBSFN combining.
Transport Channels: Uplink Transport Channels		
UL-SCH	Uplink Shared Channel	Used to transport uplink user data or control messages.
RACH	Random Access Channel	Used to access the network when UE does not have allocated uplink transmission resources or when it has no accurate uplink timing synchronization.

CONCLUSIONS

As the latest technology generation coming from the 3GPP, LTE is unique from previous standards like GSM and WCDMA in that it features packet switched architecture solely. In this paper, the LTE protocol stack was reviewed as an introduction to an otherwise much voluminous subject. The control and user planes were presented along with the layers encompassing each stack: the RRC for the control plane and the PDCP, RLC and MAC for the user plane. The function of each layer is presented along with its interaction with adjacent layers.

Abbreviations and Acronyms

3GPP	3rd Generation Partnership Project
ACK	Acknowledgment
AES	Advanced Encryption Standard
AM	Acknowledged Mode
ARQ	Automatic Repeat Request
AuC	Authentication Center
BCCH	Broadcast Control Channel
BCH	Broadcast Channel
CCCH	Common Control Channel
DCCH	Dedicated Control Channel
DL-SCH	Downlink Shared Channel
DRB	Data Radio Bearers
DRX	Discontinuous reception
DTCH	Dedicated Traffic Channel
ECM	EPS Connection Management
EMM	EPS Mobility Management
EPC	Evolved Packet Core
EPS	Evolved Packet System
GTP	GPRS Tunneling Protocol
HARQ	Hybrid Automatic Repeat Request
HSS	Home Subscriber Server
IP	Internet Protocol
LTE	Long Term Evolution
MAC	Medium Access Control Layer
MBMS	Multimedia Broadcast/Multicast Service
MCCH	Multicast Control Channel
MCH	Multicast Channel
MIB	Master Information Block
MME	Mobility Management Entity
MTCH	Multicast Traffic Channel
NACK	Negative Acknowledgment
NAS	Non-Access Stratum
PBR	Prioritized Bit-Rates
PCCH	Paging Control Channel
PCH	Paging Channel
PCRF	Policy Control Enforcement Function
PDCP	Packet Data Convergence Protocol
PDN	Packet Data Network
PDU	Protocol Data Unit
P-GW	Packet Data Network Gateway
PHY	Physical Layer
RACH	Random Access Channel
RLC	Radio Link Control
RRC	Radio Resource Control

RRM	Radio Resource Management
SAE	System Architecture Evolution
SAP	Service Access Point
SBR	Signaling Radio Bearers
SDU	Service Data Unit
S-GW	Serving Gateway
SIB	System Information Blocks
TB	Transport Block
TM	Transparent Mode
UE	User Equipment
UL-SCH	Uplink Shared Channel
UM	Unacknowledged Mode
UMTS	Universal Mobile Telecommunication System
USIM	Universal Subscriber Identity Module

Corporate Headquarters

18 Byer Drive
Markham, ON L3P 6V9
Canada
+1.416.969.9570

Inquiries

Frank Rayal, CTO
+1.416.294.7211
frank@tsiwireless.com

For more information please visit

www.tsiwireless.com

Telesystem Innovations Inc. (TSI) is a leading telecommunications management and technical consulting firm focusing on broadband wireless system deployments and applications. Headquartered in Toronto, Canada, the company has served customers on a global basis and particularly in emerging markets because of the large demand for broadband wireless.

TSI services entities across the wireless network supply chain: equipment vendors, system integrators and network operators. TSI services are provided by a team of telecommunication industry professionals with expertise in managing large-scale wireless network buildout, optimization and expansion; product development, design and marketing; financial analysis and market research; and business development. TSI staff has contributed to the successful launch of several wireless networks on a worldwide scale including networks in Canada, the United States, Europe, the Middle East and Latin America.

TSI 100326-003